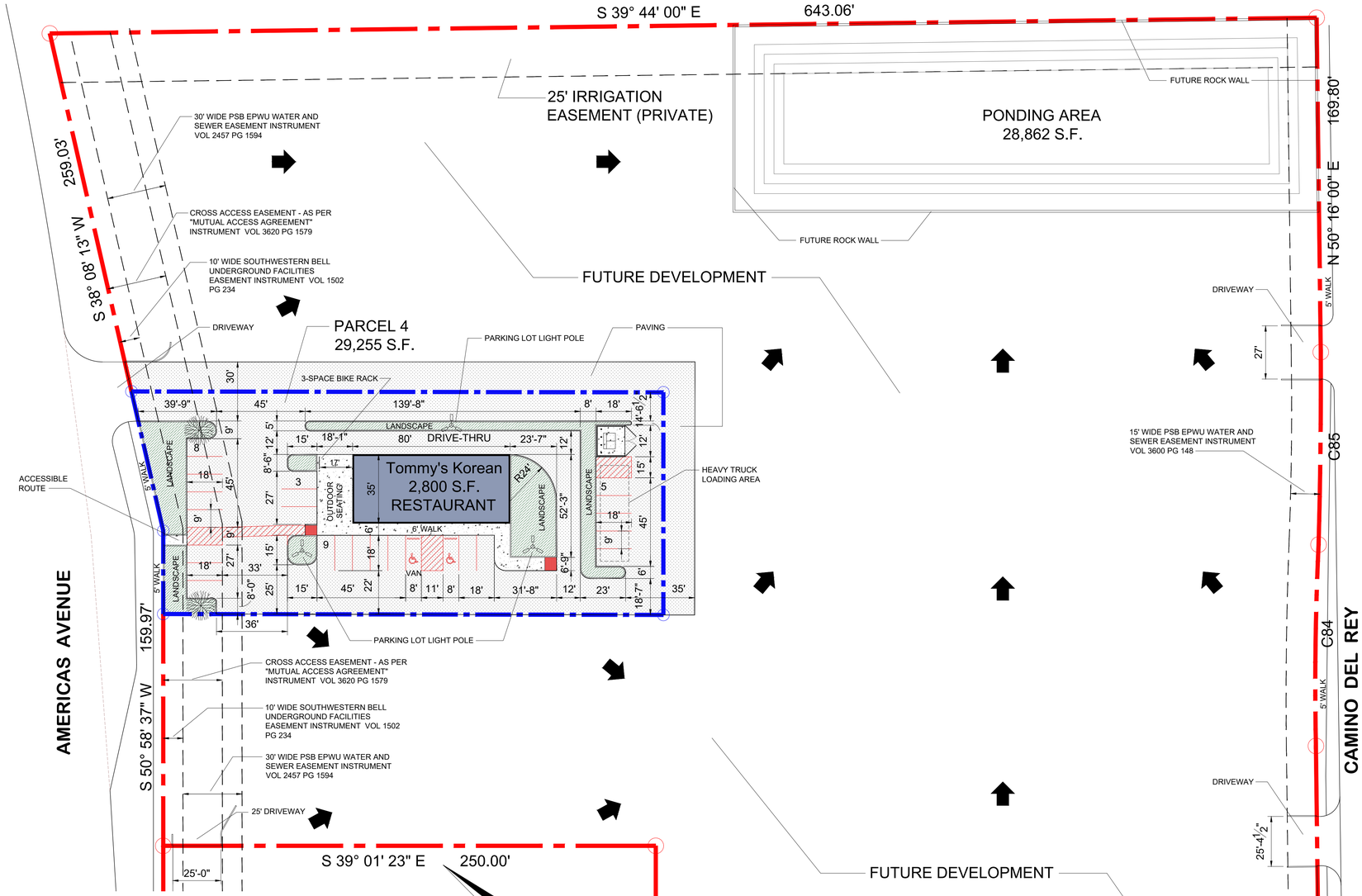

NO.	BEARING	CHORD	DELTA	RADIUS	LENGTH	TAN
C1	S 87° 06' 30" E	27.09'	85° 15' 00"	20.00'	29.76'	18.41'
C84	S 51° 41' 57" W	100.00'	02° 51' 54"	2000.00'	100.01'	50.02'
C85	S 51° 41' 57" W	100.00'	02° 51' 54"	2000.00'	100.01'	50.02'

1 DETAILED SITE DEVELOPMENT PLAN

SCALE: 1" = 30' - 0"

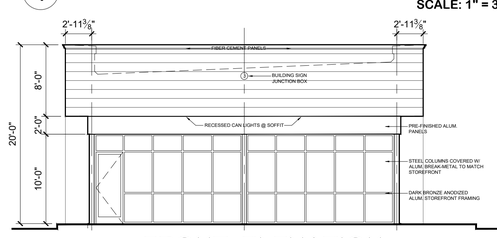

FRONT ELEVATION

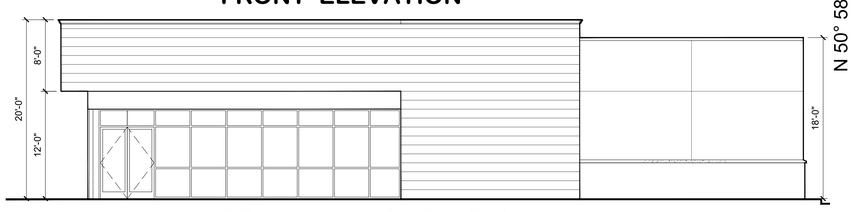

2 BLDG. ELEVATIONS - SIDE

SCALE: 1/8" = 1' - 0"

GENERAL INFORMATION

LEGAL DESCRIPTION:

PORTION OF LOT 1, BLOCK 2, LAS PLACITAS DEL REY, CITY OF EL PASO, EL PASO COUNTY, TEXAS. CONTAINING 330,436.88 S.F. OR 7.5858 ACRES ±

ZONING:

C-3 SC

FRONT YARD SETBACK:	0' SETBACK
REAR YARD SETBACK:	10' SETBACK
SIDE YARD SETBACK:	10' SETBACK WHEN ABUTTING A RESIDENTIAL OR APARTMENT DISTRICT
SIDE STREET SETBACK:	10' SETBACK

PARKING:

Tommy's Korean Express:

BUILDING AREA: 2,800 S.F. (RESTAURANT)

PARKING: Minimum 1/144 s.f. = 19.4; Maximum 1/100 s.f. = 28.0

PROVIDED: 23, 2 ADA

BICYCLE SPACES: 3 SPACES PROVIDED

LANDSCAPING:

PARCEL LAND AREA:	29,255 S.F.
BUILDING AREA:	2,800 S.F.
NET AREA:	26,455 S.F.
CALCULATED 15% LANDSCAPE REQUIRED:	3,968.25 S.F.
LANDSCAPE PROVIDED:	4,104.5 S.F.
PARKING LOT TREES: (AS REQUIRED)	1 TREE / 5 SPACES OVER MAX. REQUIRED: 1 TREE - 2 PROVIDED)

NOTE: FUTURE DEVELOPMENT TO COMPLY WITH LANDSCAPE ORDINANCE

LEGEND:

- HMAC PAVING
- 3 HEADS LED LIGHT FIXTURE ATOP OF 30' TALL SQUARE, STRAIGHT, STEEL POLE ON REINFORCED 30" DIA. CONCRETE BASE
- LANDSCAPING
- PARKING LOT TREE
- CONCRETE
- DRAINAGE FLOW

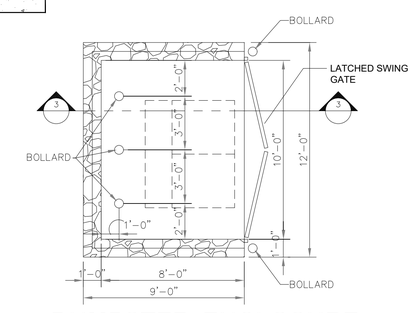

3 DUMPSTER ENCLOSURE

SCALE: 1/4" = 1' - 0"

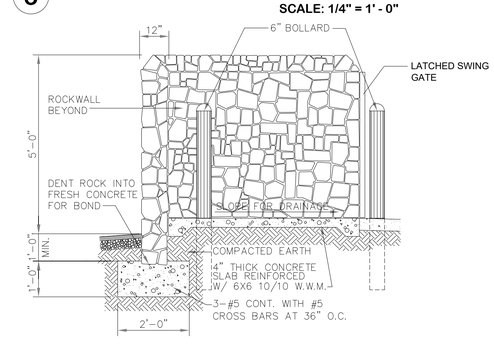

4 ENCLOSURE SECTION

SCALE: 1/2" = 1' - 0"

REVISIONS:

NO:	DATE:	REFERENCE:

GEP GROTTO DESIGN + CONSTRUCTION + MANAGEMENT

DETAILED SITE DEVELOPMENT PLAN
710 N. AMERICAS AVENUE
NORTH LOOP AND JOE BATTLE

SEAL:

SHEET NAME:

DETAILED SITE DEVELOPMENT PLAN

AC-1

DATE ISSUED:

03/19/2026